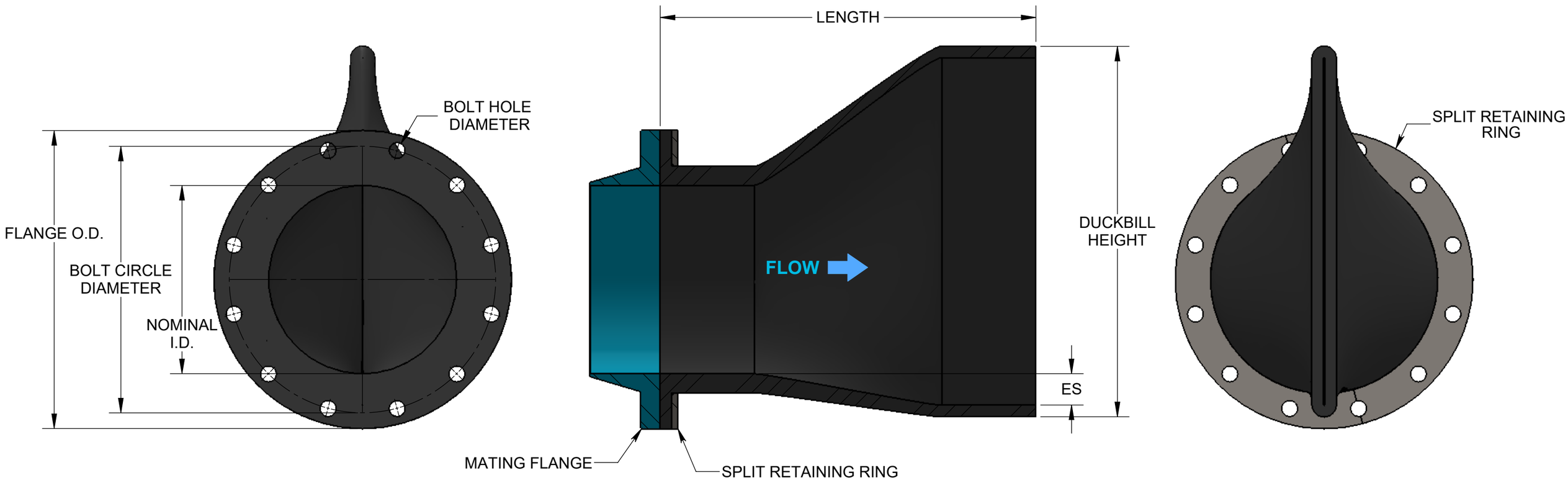
BOLT HOLE DIAMETER
FLANGE O.D.
BOLT CIRCLE DIAMETER
NOMINAL I.D.
LENGTH
FLOW
DUCKBILL HEIGHT
ES
MATING FLANGE
SPLIT RETAINING RING
SPLIT RETAINING RING